Guidelines for Display Rules & Regulations 2012

Shown in feet and meters

Guidelines for Display Rules and Regulations 2012

The following Guidelines for Display Rules and Regulations have been established in accordance with guidelines set forth by the International Association for Exhibition and Events (IAEE). Compliance with fire, safety, Americans with Disabilities Act (ADA), and other government requirements have also been addressed. It is Messe Frankfurt's goal that the display rules and regulations, ultimately, shall provide exhibitors with all the information necessary to properly design and build exhibits, as well as plan their booth's layout and content.

messe frankfurt

Linear Booth

Linear Booths have only one side open to an aisle and are generally arranged in a series along a straight line. They are also called “in-line” booths. Floor covering is required in all rented space.

Dimensions

For purposes of consistency and ease of layout and/or reconfiguration, floor plan design in increments of 10ft (3.05m) has become the de facto standard in the United States. Therefore, unless constricted by space or other limitations, Linear Booths are most commonly 10ft (3.05m) wide and 10ft (3.05m) deep, i.e. 10ft by 10ft (3.05m by 3.05m), with a maximum back wall height limitation of 8ft (2.44m).

Use of Space

Messe Frankfurt Shows allow exhibitors full “Cubic Content” use of the exhibit space. Therefore, you are allowed to place displays or materials at the full 8 ft. (2.44m) height throughout the entire width and depth of your exhibit space.

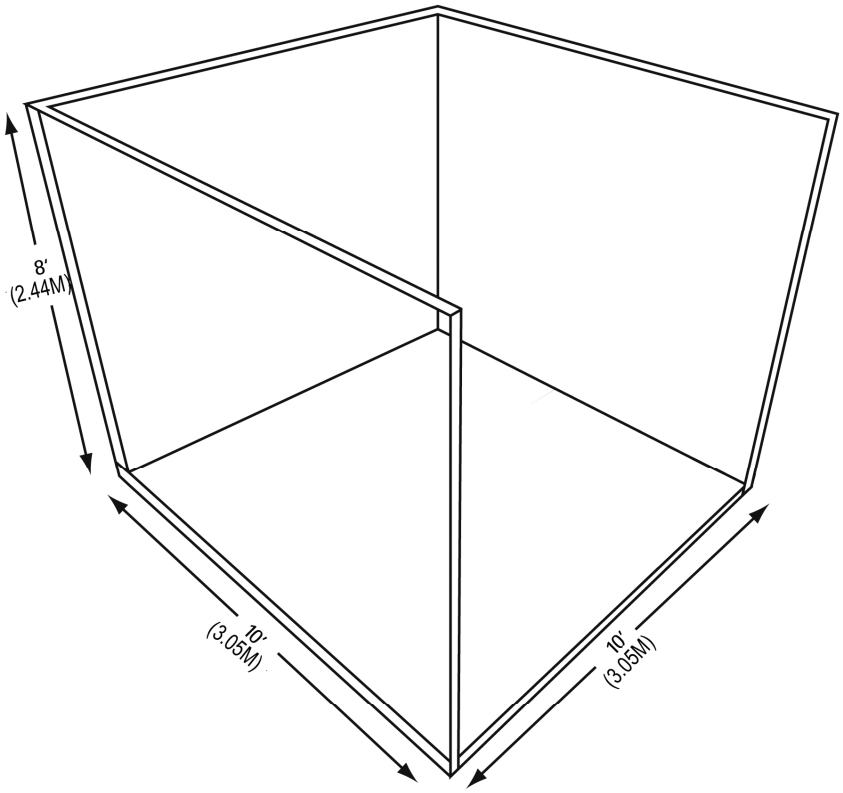

LINEAR BOOTH (10’ X 10’) (3.05m x 3.05m)

Corner Booth

A Corner Booth is a Linear Booth exposed to aisles on two sides. All other guidelines for Linear Booths apply.

Perimeter Booth

A Perimeter Booth is a Linear Booth that backs to an outside wall of the exhibit facility rather than to another exhibit. Floor covering is required in all rented space.

Dimensions and Use of Space

All guidelines for Linear Booths apply to Perimeter Booths except that the maximum back wall height is 12ft (3.66m).

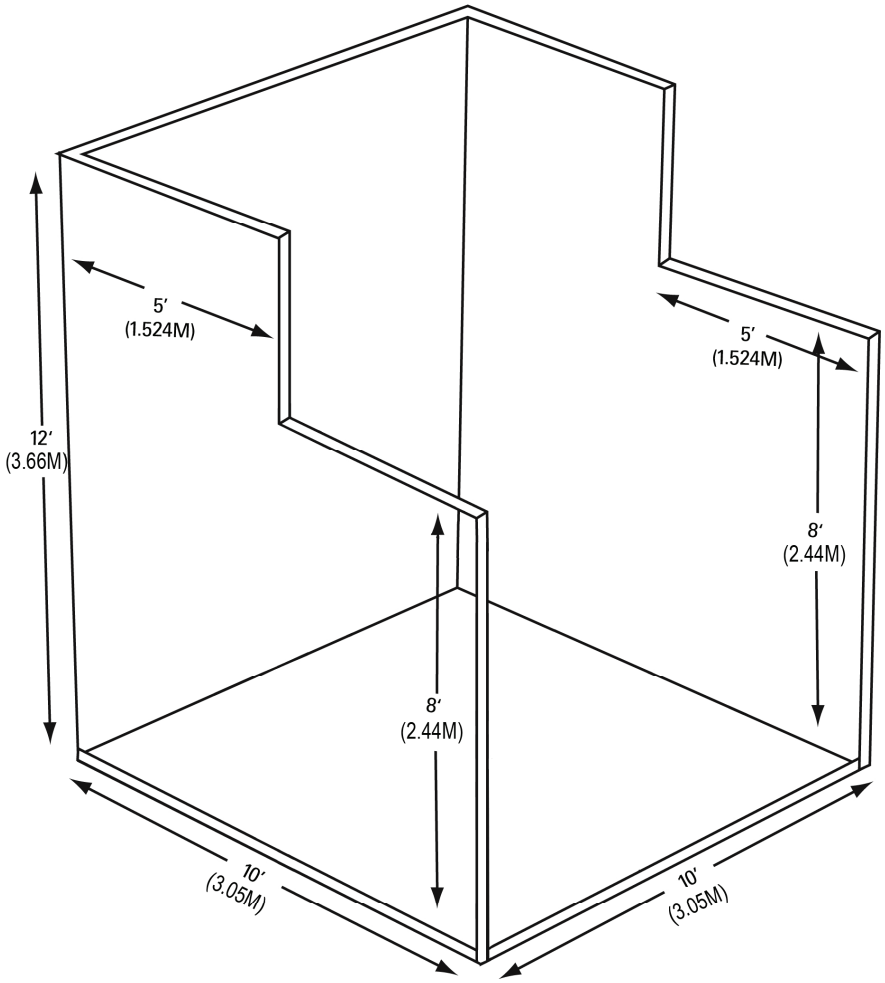

PERIMETER BOOTH (10′ X 10′) (3.05m x 3.05m)

Peninsula Booth

A Peninsula Booth is exposed to aisles on three (3) sides and is a minimum of 20′ x 20′ (6.10m) in size. Floor covering is required in all rented space.

Dimensions

A Peninsula Booth is usually 20' x 20′ (6.10m x 6.10m) or larger. Sixteen feet (16′) (4.88m) is the maximum height allowed throughout the booth space. The connecting wall between the peninsula booth and any neighbors must be “finished off” (clean and presentable to visitors) on the side facing the connecting neighbors.

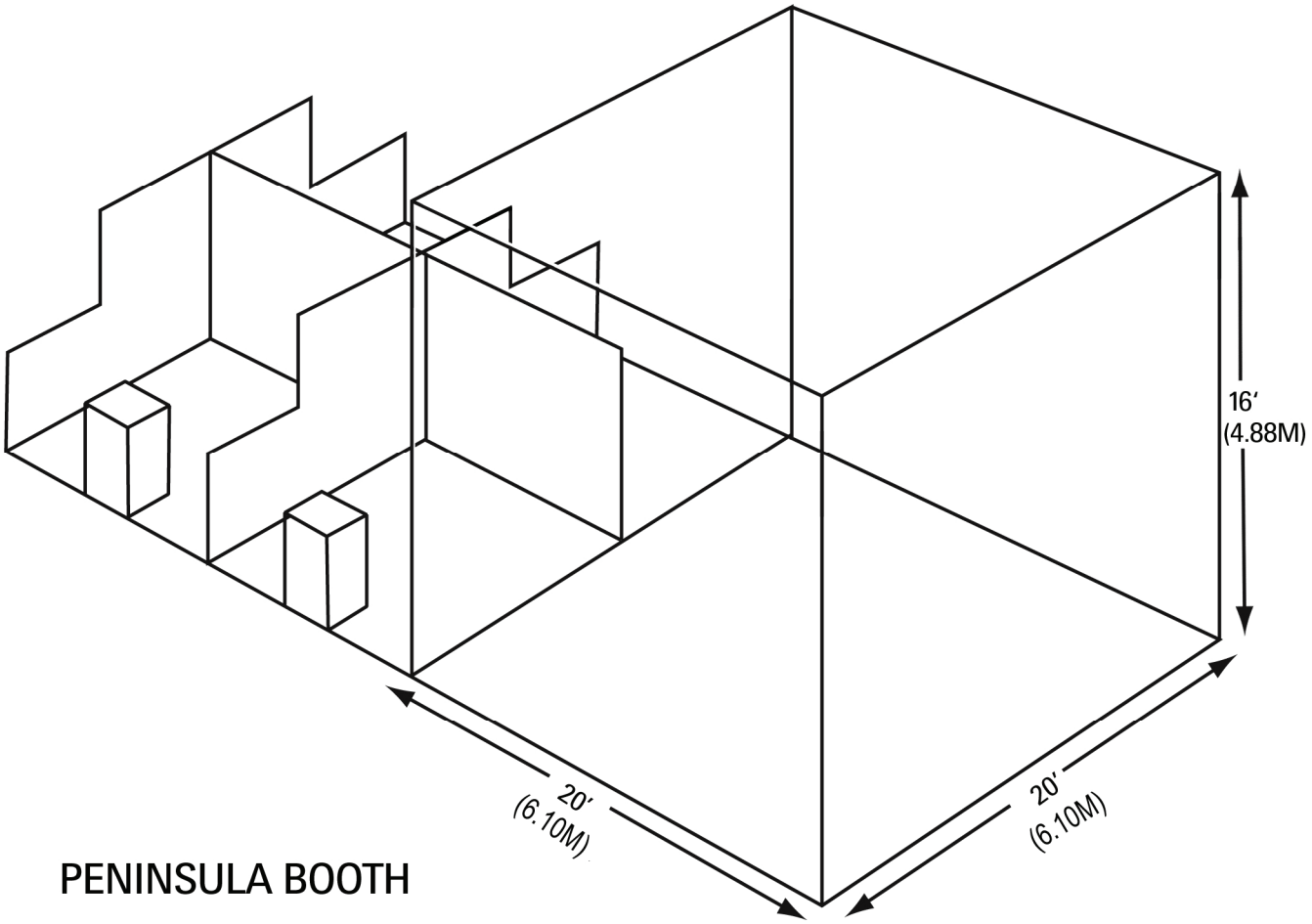

PENINSULA BOOTH

Island Booth

An Island Booth is any size booth exposed to aisles on all four sides. Floor covering is required in all rented space.

Dimensions

An Island Booth is typically 20' x 20’ (6.10m x 6.10m) or larger,

Use of Space

The entire cubic content of the space may be used up to the maximum allowable height of sixteen feet (16’) (4.88m), including signage.

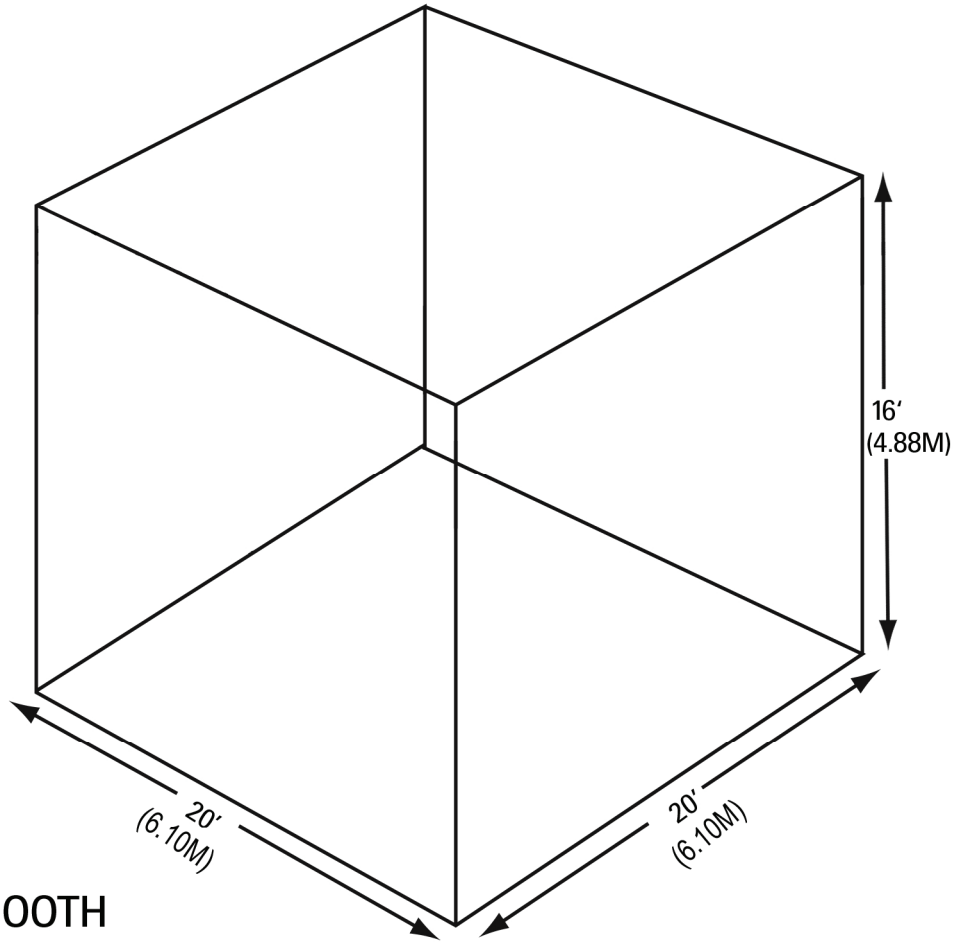

ISLAND BOOTH